CONSTRUCTION STANDARDS

⚠1 PEDESTRIAN ACCESS DETAILS

ACCESSIBLE PARKING, PASSENGER LOADING, BUS STOP AND RAMP REQUIREMENTS

STANDARD No. D-302 SHEET 6 OF 10

APPROVED [signature] DATE 4/25/08

ACCESSIBLE ROUTES:

⚠1 ACCESSIBLE EXTERIOR ROUTES SHALL BE PROVIDED FROM TRANSPORTATION STOPS, ACCESSIBLE PARKING AND ACCESSIBLE PASSENGER LOADING ZONES AND PUBLIC SIDEWALKS TO THE ACCESSIBLE BUILDING ENTRANCE THEY SERVE.

ACCESSIBLE PARKING REQUIREMENTS:

1) EACH LOT SHALL PROVIDE ACCESSIBLE PARKING SPACES IN COMPLIANCE WITH THE FOLLOWING TABLE:

NUMBER OF ACCESSIBLE PARKING SPACES

TOTAL PARKING SPACES	TOTAL REQUIRED ACCESSIBLE PARKING SPACES	NUMBER REQUIRED TO BE VAN ACCESSIBLE
1-25	1	1
26-35	2	1
36-50	3	1
51-100	4	1
101-300	8	1
301-500	12	2
501-800	16	2
801-1,000	20	3
OVER 1,000	20 SPACES PLUS 1 SPACE FOR EVERY 100 SPACES, OR FRACTION THEREOF, OVER 1,000	1 OF EVERY 8 ACCESSIBLE PARKING SPACES, OR FRACTION THEREOF

2) CAR AND VAN PARKING SPACES SHALL BE 96 INCHES (2440 mm) WIDE MINIMUM AND SHALL HAVE AN ADJACENT ACCESS AISLE.
3) ACCESS AISLES SERVING PARKING SPACES SHALL CONNECT TO THE BUILDING OR FACILITY ENTRANCE BY AN ACCESSIBLE SIDEWALK. TWO PARKING SPACES SHALL BE PERMITTED TO SHARE A COMMON ACCESS AISLE. THE VAN ACCESS AISLE IS PREFERRED TO BE AT THE RIGHT SIDE (PASSENGER SIDE) OF THE PARKING SPACE. (AN ACCESSIBLE SIDEWALK IS 36 INCHES [915 mm] MINIMUM CLEAR WIDTH; 50:1 MAXIMUM CROSS SLOPE WITH A RUNNING SLOPE OF 20:1 MAXIMUM OR THE RUNNING SLOPE MAY FOLLOW THE ADJACENT ROAD PROFILE GRADE). PARKED VEHICLE OVERHANGS SHALL NOT REDUCE THE MINIMUM 36 INCH (915 mm) CLEAR WIDTH OF AN ACCESSIBLE ROUTE.
4) ACCESS AISLES SERVING CAR PARKING SPACES SHALL BE 60 INCHES (1525 mm) WIDE MINIMUM. ACCESS AISLES SERVING VAN PARKING SPACES SHALL BE 96 INCHES (2440 mm) WIDE MINIMUM.
5) ACCESS AISLES SHALL EXTEND THE FULL LENGTH OF THE PARKING SPACES THEY SERVE.
6) ACCESS AISLES SHALL BE MARKED.
7) PARKING SPACES AND ACCESS AISLES SHALL HAVE SURFACE SLOPES NOT STEEPER THAN 50:1. ACCESS AISLES SHALL BE AT THE SAME LEVEL AS THE PARKING SPACES THEY SERVE.
8) PARKING SPACES FOR VANS SHALL HAVE A VERTICAL CLEARANCE OF 98 INCHES (2490 mm) MINIMUM AT THE SPACE AND ALONG THE VEHICULAR ROUTE THERETO.
9) EACH ACCESSIBLE PARKING SPACE SHALL BE IDENTIFIED BY A SIGN ON A POST. SIGNS SHALL INCLUDE THE INTERNATIONAL SYMBOL OF ACCESSIBILITY. THE CLEARANCE TO THE BOTTOM OF THE SIGN (R7-8) SHALL BE AT LEAST 7 FEET (2100 mm), LOCATED AT THE HEAD OF THE PARKING SPACE. VAN ACCESSIBLE PARKING SPACES SHALL HAVE AN ADDITIONAL SIGN (R7-8A) MOUNTED BELOW THE INTERNATIONAL SYMBOL OF ACCESS IDENTIFYING THE SPACE AS "VAN ACCESSIBLE."
10) PARKING SPACE AND ACCESS AISLES SHALL SHAVE OSHA SAFETY BLUE STRIPING. STRIPING SHALL BE 4 INCHES (100 mm) WIDE. ACCESS AISLES STRIPING SHALL BE 30 INCHES (760 mm) ON CENTER.
11) EACH ACCESSIBLE PARKING SPACE SHALL INCLUDE, CENTERED AT THE FOOT, A PAVEMENT MARKING IF THE INTERNATIONAL SYMBOL OF ACCESSIBILITY.

ACCESSIBLE PASSENGER LOADING ZONE REQUIREMENTS:

1) PASSENGER LOADING ZONES SHALL PROVIDE A 60 INCH (1525 mm) WIDE ACCESS AISLE ADJACENT AND PARALLEL TO A VEHICLE PULL-UP SPACE. ACCESS AISLES SHALL BE 20 FEET (6100 mm) LONG MINIMUM.
⚠2) ACCESS AISLES SHALL BE PART OF THE ACCESSIBLE ROUTE TO THE BUILDING OR FACILITY ENTRANCE.
3) VEHICLE PULL-UP SPACES IN PASSENGER LOADING ZONES AND ACCESS AISLES SHALL HAVE SURFACE SLOPES NOT STEEPER THAN 50:1. ACCESS AISLES SHALL BE AT THE SAME LEVEL AS THE VEHICLE PULL-UP SPACE THEY SERVE.
⚠4) VERTICAL CLEARANCE OF 114 INCHES (2895 mm) MINIMUM SHALL BE PROVIDED AT PASSENGER LOADING ZONES AND ALONG VEHICLE ACCESS ROUTES TO SUCH AREAS FROM SITE ENTRANCES.
⚠5) EACH ACCESSIBLE PASSENGER LOADING ZONE SHALL BE IDENTIFIED BY A SIGN ON A POST. SIGNS SHALL INCLUDE THE INTERNATIONAL SYMBOL OF ACCESSIBILITY.

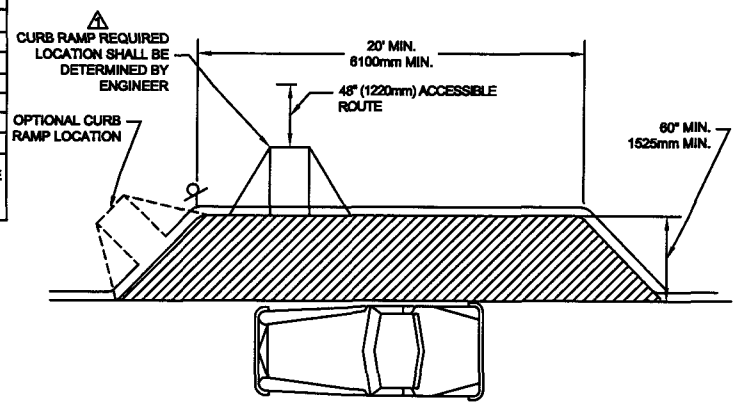

ACCESSIBLE PASSENGER LOADING ZONE
PLAN VIEW

BUS STOP PAD REQUIREMENTS:

1) BUS STOP PADS SHALL HAVE A STABLE, FIRM, AND SLIP RESISTANT SURFACE.
2) THE MINIMUM CLEARANCE LENGTH SHALL BE 96 INCHES (2440 mm), MEASURED PERPENDICULAR FROM THE CURB OR EDGE OF THE VEHICLE ROADWAY. THE MINIMUM CLEAR WIDTH SHALL BE 60 INCHES (1525 mm), MEASURED PARALLEL TO THE CURB OR EDGE OF THE VEHICLE ROADWAY.
3) THE SLOPE OF THE PAD PARALLEL TO THE ROADWAY SHALL BE THE SAME AS THE ROADWAY. THE SLOPE OF THE PAD PERPENDICULAR TO THE ROADWAY SHALL NOT BE STEEPER THAN 50:1.
4) PADS SHALL ADJOIN AN ACCESSIBLE SIDEWALK.

RAMP REQUIREMENTS:

1) WALKING SURFACE ON ACCESSIBLE ROUTES WITH A RUNNING SLOPE STEEPER THAN 20:1 ARE RAMPS.
2) RAMP RUNS SHALL HAVE A RUNNING SLOPE NOT STEEPER THAN 12:1. EXCEPTION: RAMPS IN OR ON EXISTING BUILDINGS OR FACILITIES SHALL BE PERMITTED TO HAVE SLOPES STEEPER THAN 12:1 AND SHALL COMPLY WITH THE FOLLOWING TABLE WHERE SUCH SLOPES ARE NECESSITATED BY SPACE LIMITATIONS. A SLOPE STEEPER THAN 8:1 SHALL NOT BE PERMITTED.

TABLE FOR EXISTING SITES BUILDING AND FACILITIES

SLOPE	MAXIMUM RISE
STEEPER THAN 10:1 BUT NOT STEEPER THAN 8:1	3 INCHES (175mm)
STEEPER THAN 12:1 BUT NOT STEEPER THAN 10:1	6 INCHES (150mm)

3) CROSS SLOPE OR RAMP RUNS SHALL NOT BE STEEPER THAN 50:1.
4) FLOOR OR GROUND SURFACES OF RAMP RUN SHALL BE STABLE, FIRM AND SLIP RESISTANT.
5) THE CLEAR WIDTH OF A RAMP RUN SHALL BE 36 INCHES (915 mm) MINIMUM MEASURED BETWEEN HANDRAILS.
6) THE RISE FOR ANY RAMP RUN SHALL BE 30 INCHES (1760 mm) MAXIMUM.
7) RAMPS SHALL HAVE LANDINGS AT THE BOTTOM AND TOP OF EACH RUN. LANDINGS SHALL COMPLY WITH THE FOLLOWING:
   A. LANDINGS SHALL HAVE A SLOPE NOT STEEPER THAN 50:1.
   ⚠B. CLEAR WIDTH OF LANDINGS SHALL BE AT LEAST AS WIDE AS THE WIDEST RAMP RUN LEADING TO THE LANDING.
   C. LANDING LENGTH SHALL BE 60 INCHES (1525 mm) MINIMUM CLEAR.
   D. RAMPS THAT CHANGE DIRECTION AT LANDINGS SHALL HAVE A 60 INCH BY 60 INCH (1525 mm) MINIMUM LANDING.
   ⚠E. WHERE DOORWAYS ARE ADJACENT TO A RAMP LANDING, MANEUVERING CLEARANCES REQUIRED BY ANSI SECTIONS 404.2.4 AND 404.3.2 SHALL BE PERMITTED TO OVERLAP THE LANDING AREA.
8) RAMPS WITH A RISE GREATER THAN 6 INCHES (150 mm) SHALL HAVE HANDRAILS. HANDRAILS SHALL NOT REDUCE THE REQUIRED CLEARANCES OF A RAMP RUN OR LANDINGS.
9) EDGE PROTECTION SHALL BE PROVIDED ON EACH SIDE OF RAMP RUNS AND AT EACH SIDE OF RAMP LANDINGS.

EXCEPTIONS:

A. RAMPS NOT REQUIRED TO HAVE HANDRAILS WHERE SIDE FLARES ARE PROVIDED.
B. SIDES OF RAMP LANDINGS SERVING AN ADJOINING RAMP RUN OR STAIRWAY.
C. SIDES OF RAMP LANDINGS HAVING A VERTICAL DROP-OFF OF ½ INCH (13 mm) MAXIMUM WITHIN 10 INCHES (255 mm) HORIZONTALLY OF THE MINIMUM LANDING AREA.

10) EDGE PROTECTION MAY BE PROVIDED BY EXTENDING A FLOOR OR GROUND SURFACE OF THE RAMP RUN OR LANDING, 12 INCHES (305 mm) MINIMUM BEYOND THE INSIDE FACE OF A HANDRAIL OR AN EDGE PROTECTION CURB OR BARRIER SHALL BE PROVIDED THAT PREVENTS THE PASSAGE OF A 4 INCH (100 mm) DIAMETER SPHERE BELOW A HEIGHT OF 4 INCHES (100 mm).
11) OUTDOOR RAMPS AND APPROACHES TO RAMPS SHALL BE DESIGNED SO THAT WATER WILL NOT ACCUMULATE ON WALKING SURFACES.

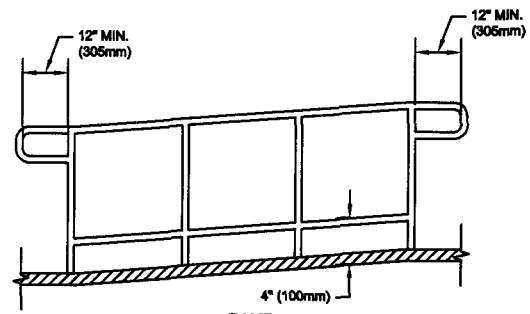

RAMP
ELEVATION

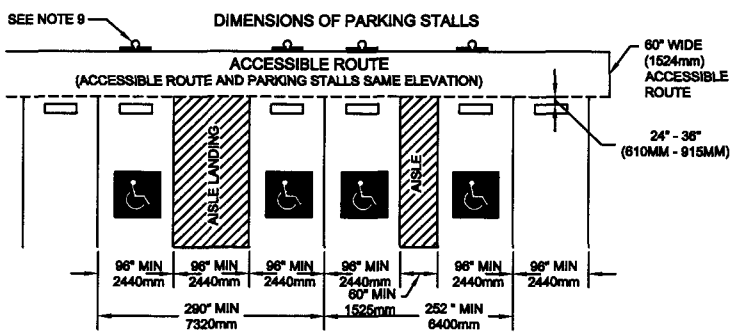

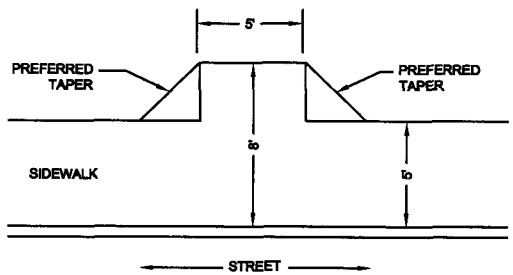

BUS STOP PAD
PLAN VIEW

N.T.S.

CITY OF FARMINGTON
PUBLIC WORKS DEPARTMENT

REV.	DATE
⚠1	1/22/08